1853191
Glamour Chest

Parts and Hardware List

A.	Chest Assembly	1 pc
B.	Feet	4 pcs
C.	Adjustable Shelf	1 pc
D.	Shelf Pins	4 pcs

* Please make sure that you have all the parts indicated above before you begin assembly of this item.
* This item should be assembled on a soft surface to prevent scratching the finish during assembly.
* This item may require periodic tightening.

Assembly Instructions

1. **Attach Feet (B)** Place Chest Assembly (A) upside down on a soft surface carefully. Align the exposed threads of Feet (B) with the pre-threaded holes in the Chest Assembly (A). Tighten by turning in a clockwise direction. See Illustration #1. If the Feet (B) are out of alignment after they are tight, turn until the sides of the Feet (B) align with sides of corner posts on Chest Assembly (A). Note: Do not over tighten the Feet (B).
2. **Attach Shelf Pins (D)** Put Chest upright. Insert the Shelf Pins (D) into the pre-drilled holes in the posts of chest. Place the Adjustable Shelf (C) on the Shelf Pins (D). See Illustration #2

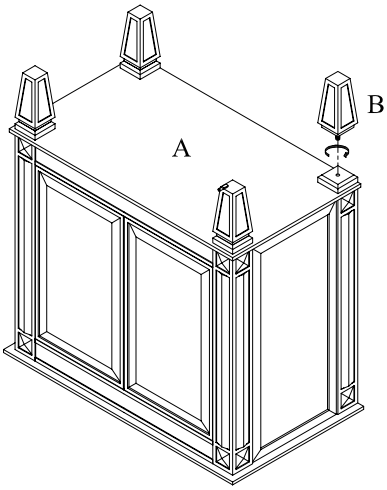

Illustration # 1

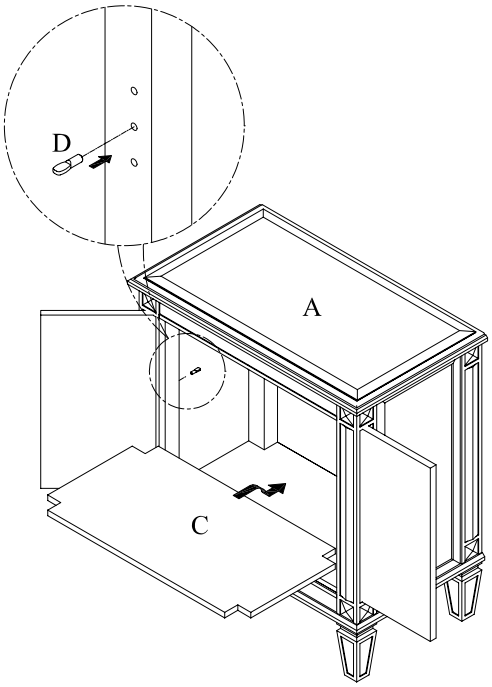

Illustration # 2